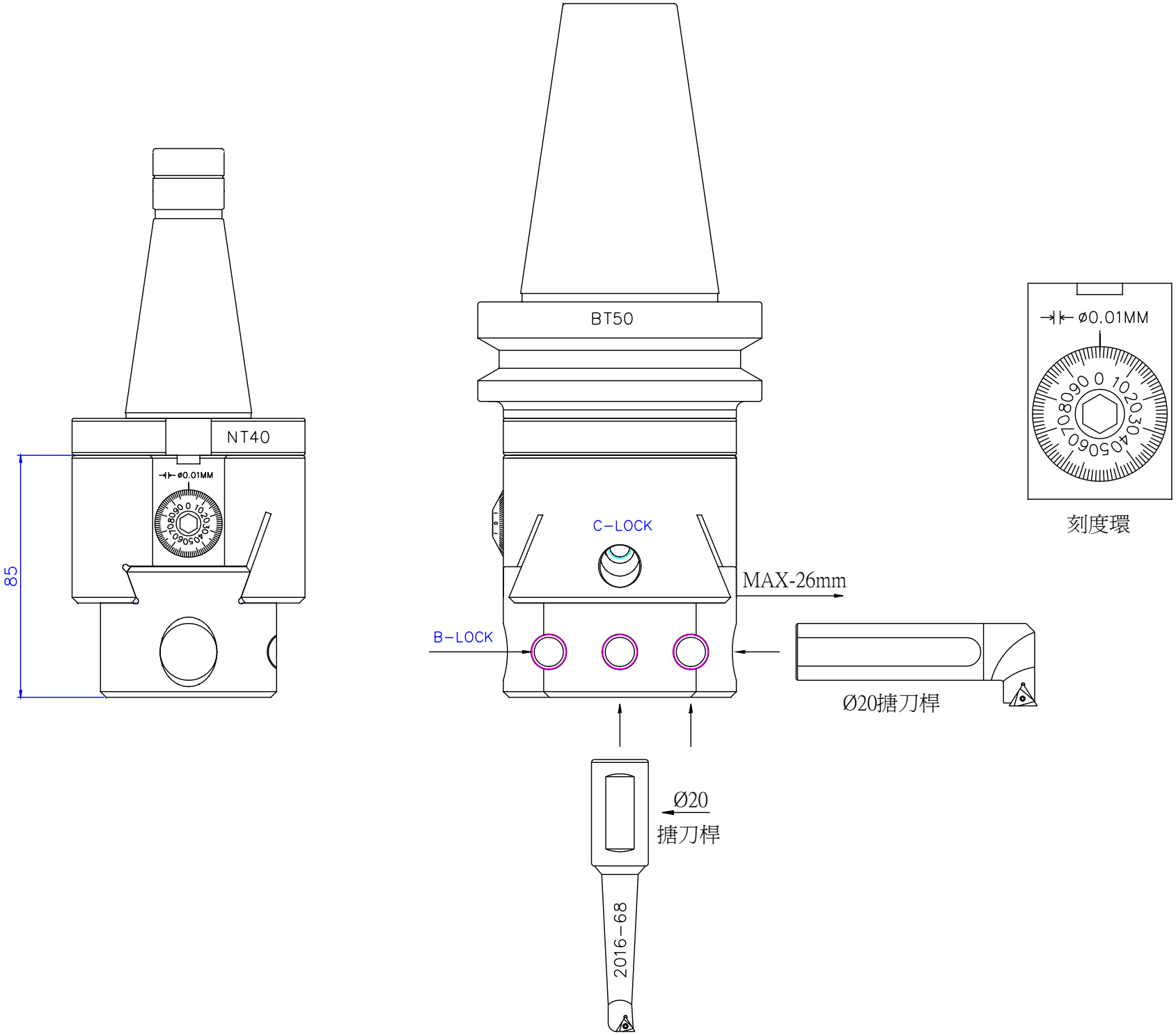
NT40
⊣⊢ ø0.01MM
85
BT50
C-LOCK
B-LOCK
MAX-26mm
Ø20搪刀桿
Ø20
搪刀桿
2016-68
⊣⊢ ø0.01MM
刻度環